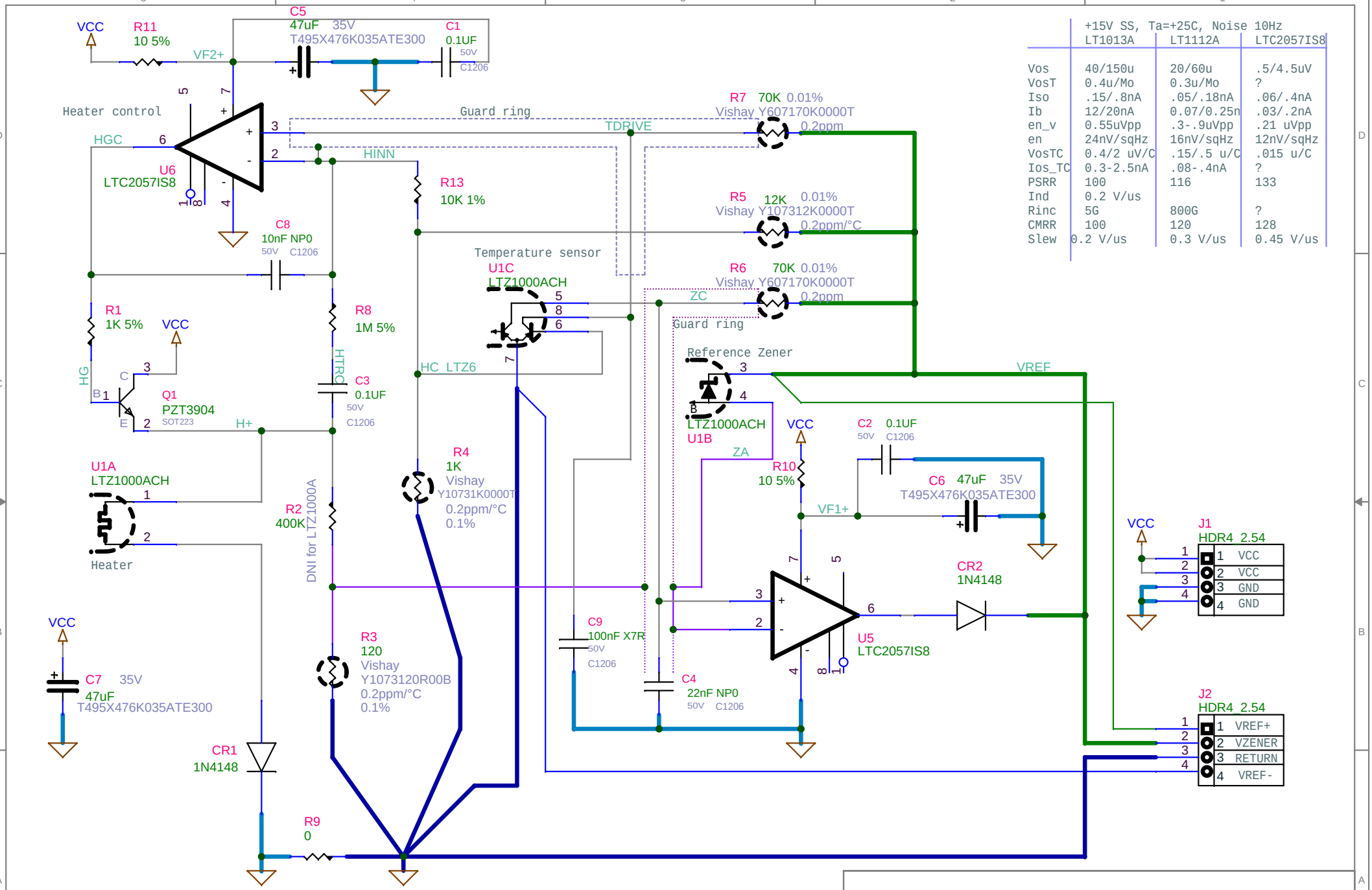

	+15V SS, Ta=+25C, Noise 10Hz		
	LT1013A	LT1112A	LTC2057IS8
Vos	40/150u	20/60u	.5/4.5uV
VosT	0.4u/Mo	0.3u/Mo	?
Iso	.15/.8nA	.05/.18nA	.06/.4nA
Ib	12/20nA	0.07/0.25n	.03/.2nA
en_v	0.55uVpp	.3-.9uVpp	.21 uVpp
en	24nV/sqHz	16nV/sqHz	12nV/sqHz
VosTC	0.4/2 uV/C	.15/.5 u/C	.015 u/C
Ios_TC	0.3-2.5nA	.08-.4nA	?
PSRR	100	116	133
Ind	0.2 V/us		
Rinc	5G	800G	?
CMRR	100	120	128
Slew	0.2 V/us	0.3 V/us	0.45 V/us

Title	xDevs.com KX Project | Voltage reference	
Size A	Document Number http://dev.xdevs.com/projects/kx	Rev B01
Date: Friday, April 17, 2015	Sheet 1 of 1	

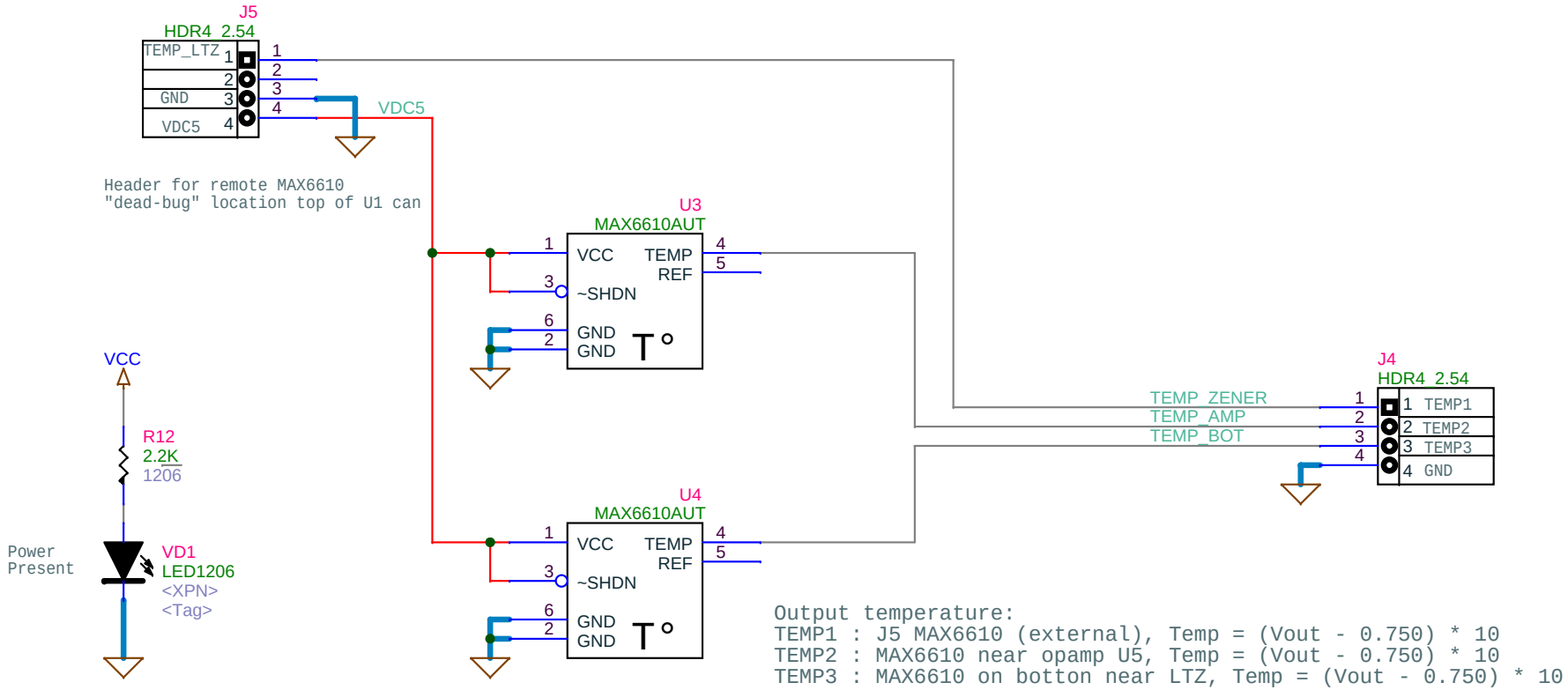

Output temperature:
TEMP1 : J5 MAX6610 (external), Temp = (Vout - 0.750) * 10
TEMP2 : MAX6610 near opamp U5, Temp = (Vout - 0.750) * 10
TEMP3 : MAX6610 on botton near LTZ, Temp = (Vout - 0.750) * 10

Title	xDevs.com KX Project | Voltage reference monitoring	
Size A	Document Number http://dev.xdevs.com/projects/kx2001	Rev B01
Date: Friday, April 17, 2015	Sheet 1 of 1	